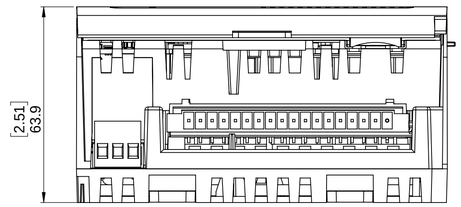

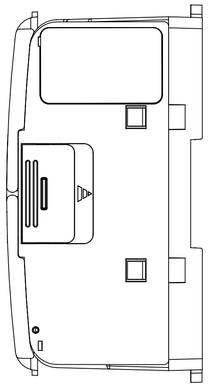

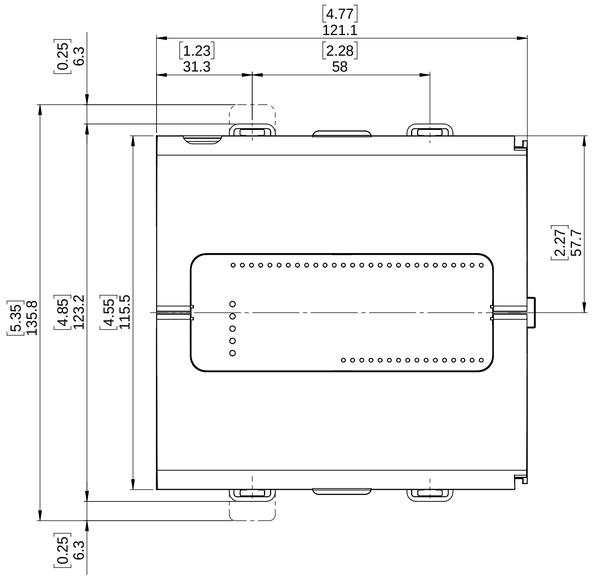

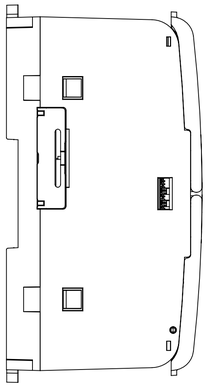

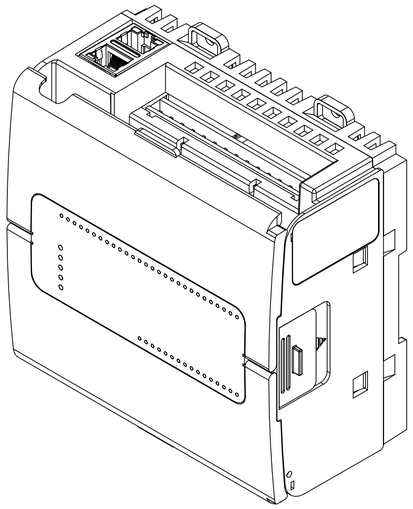

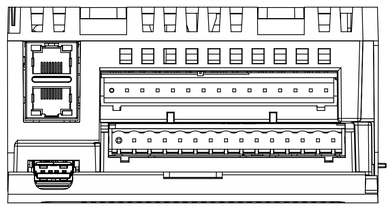

Notes:

1. Dimension in [ ] are in inches

The above constitute the property of Unitronics (1989)(R"G) Ltd., and are protected by copyright laws as its "creation". Unitronics (1989)(R"G) Ltd. retains all rights to its proprietary assets including, but not limited to the drawings, sketches and drafts, and shall remain the property of Unitronics (1989)(R"G) Ltd. Copyright protection claimed includes all forms and matters of materials and information. Any unauthorized use, copying, quoting, sale, distribution, transfer, assignment, giveaway, rent, lease, sublicense or dispose thereof are strictly prohibited without prior written permission from Unitronics (1989)(R"G) Ltd.

UNITRONICS®
P.O.B. 300, Ben Gurion Airport, Israel 70100, Unitronics Building, Airport City Tel: +972 (3) 9778888 Fax: +972 (3) 9778877

	SIGNATUR	DATE	DIMENSIONS ARE IN mm		TITLE:
DESIGNED	Laor Bar	11.11.2018	TOLERANCES UNLESS OTHERWISE SPECIFIED:		Unistream PLC
DRAWN	Laor Bar	11.11.2018	LINEAR	±0.1mm	
CHECKED			ANGULAR	±0.5°	
Q.A			Mold Number:		Project:
APPV'D	-		UNITRONICS mold P.N:		P.N
FINISH:		First Angle	MATERIAL:		REV A

SHEET SIZE A1
SCALE:1:1
SHEET 1 OF 1